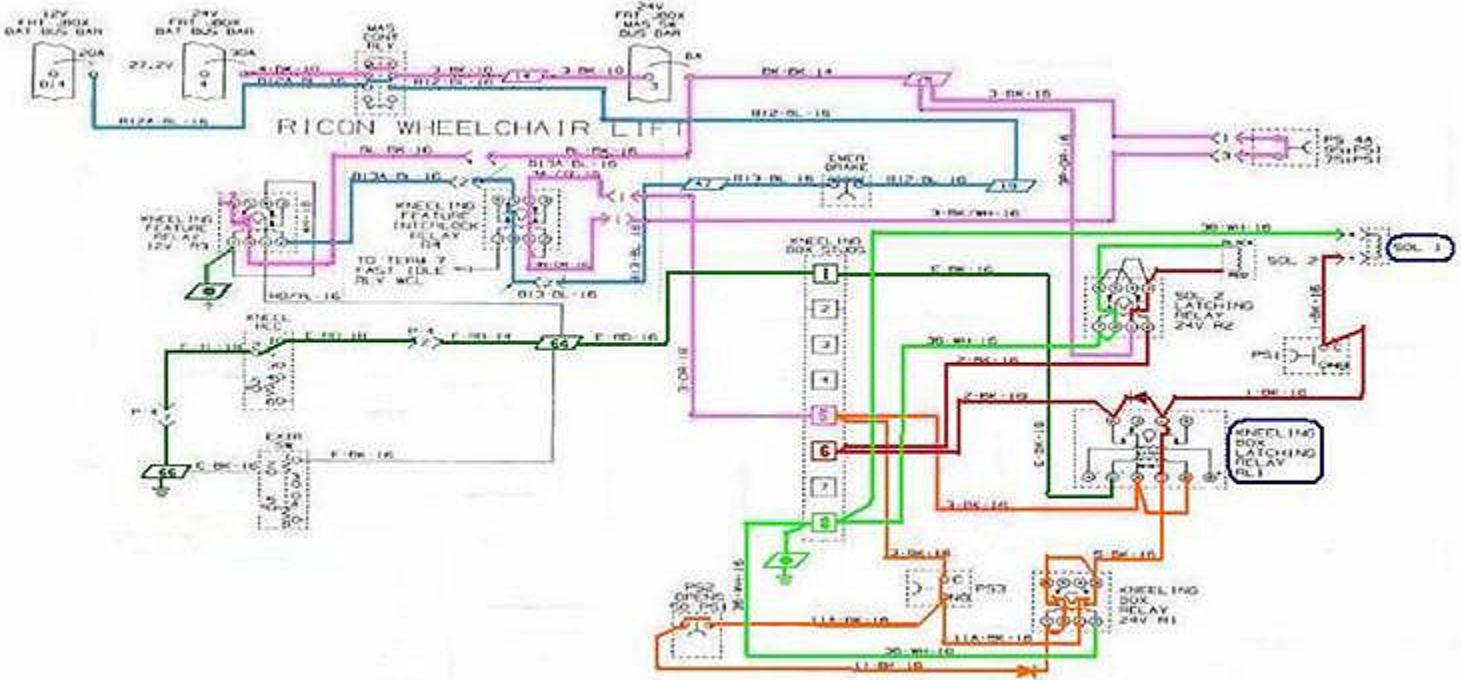
RICON WHEELCHAIR LIFT
12V FRT JBOX BAT BUS BAR
24V FRT JBOX BAT BUS BAR
24V FRT JBOX MAS SW BUS BAR
MAS CONT RLY
KNEELING FEATURE RELAY 12V R3
KNEELING FEATURE INTERLOCK RELAY R4
TO TERM 7 FAST IDLE RLY WCL
EMER BRAKE
KNEELING BOX STUDS
SOL 1
SOL 2
SOL 2 LATCHING RELAY 24V R2
KNEELING BOX LATCHING RELAY RL1
KNEELING BOX RELAY 24V R1
PS1
PS2 OPENS 50 PSI
PS3
EXTR SW
KNEEL REC
27.2V
20A
30A
8A
66